Riverside 6 Drawer Dresser

7038222COM
7038306COM
7038335COM

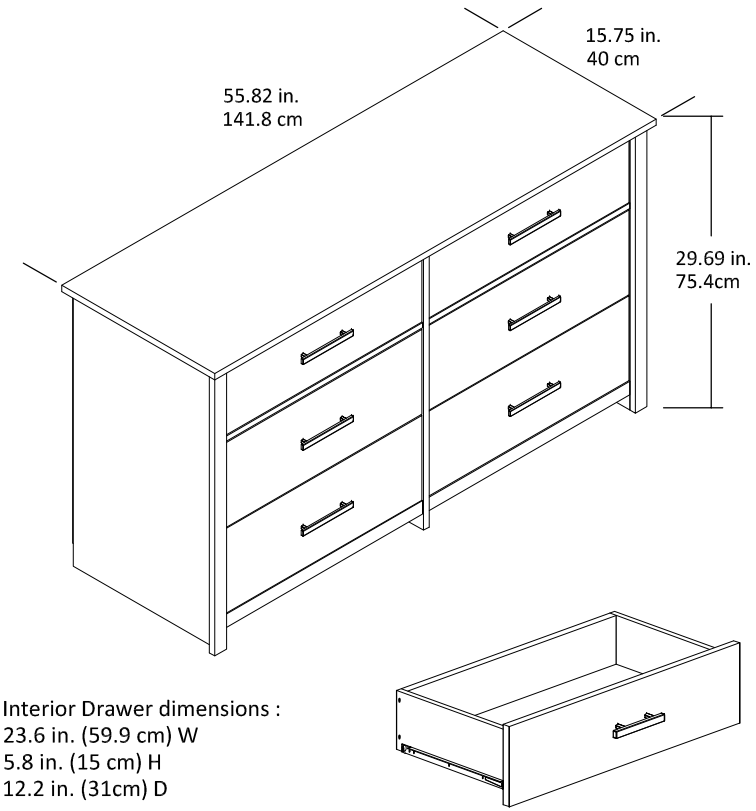

Interior Drawer dimensions :
23.6 in. (59.9 cm) W
5.8 in. (15 cm) H
12.2 in. (31cm) D

Wood Breakdown : PB : 90%, MDF : 10%
Total storage : 0.97 cubic feet

Overall Product Size :
55.82''W x 15.75''D x 29.69''H
141.8cm W x 40cm D x 75.4cm H

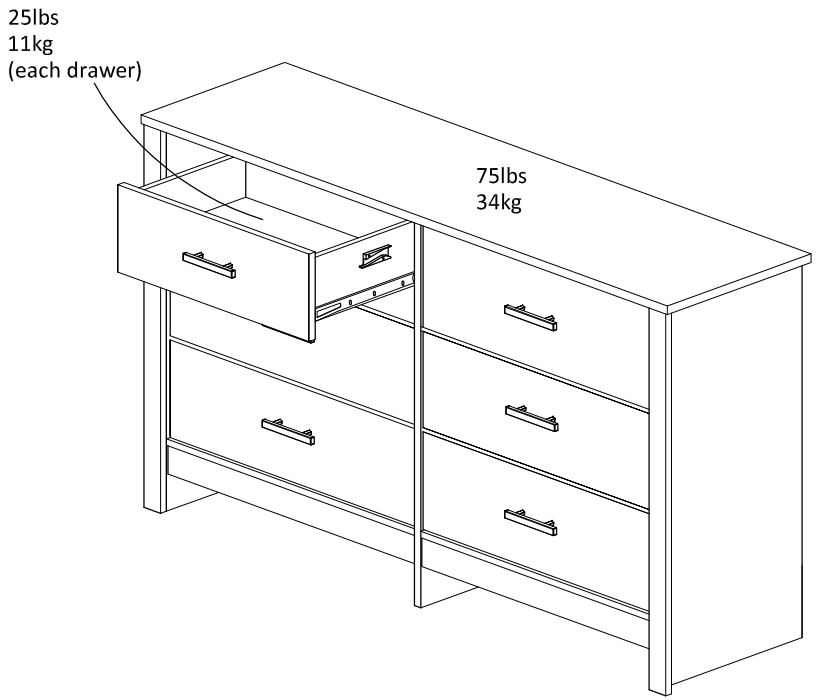

Maximum Weight Capacities
Unit Weight : 107.4 lbs. (48.72kg)